Old Molly Hare - dulcimer
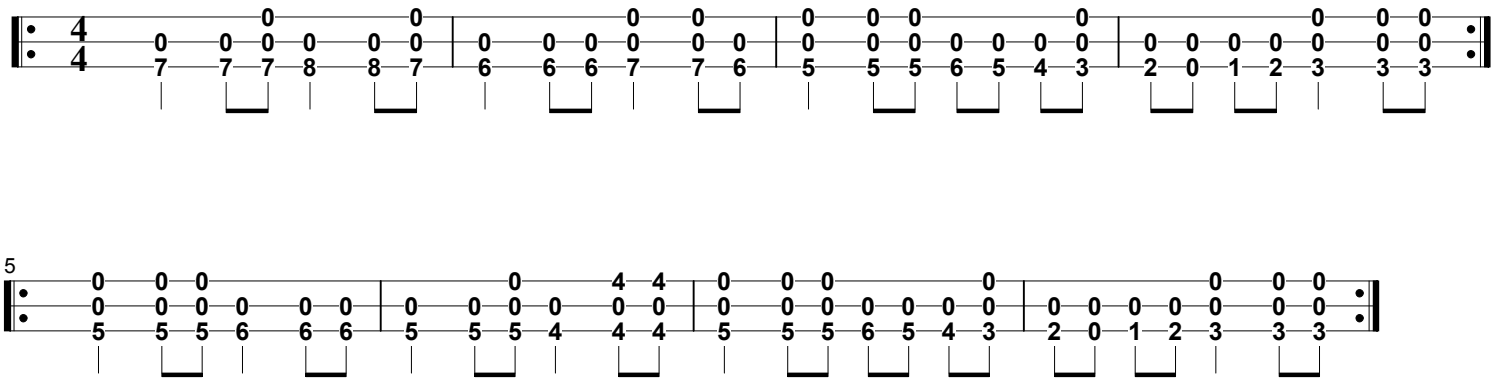
lap dulcimer DAA